Introduction to Electronics Engineering

(APJ Abdul Kalam Technological University)

Dr K. A. Navas **M Tech, PhD**
Principal
L B S College of Engineering
Kasaragod, Kerala

T. A. Suhail **M Tech**
Asst. Professor in ECE
Al-Ameen Engineering College
Shoranur, Kerala

Rajath Publishers

28/450-A, Club Road, Girinagar South, Kadavanthra, Kochi-682020

www.edutalks.org

Introduction to Electronics Engineering

Second edition
Printed at Pioneer offset, Kochi

Copyright ©2016 Rajath publishers

This book is sold subjected to the condition that it shall not, by way of trade or otherwise, be lent, resold, hired out, or otherwise circulated without publisher's prior written consent in any form of binding or cover other than that in which it is published and without a similar condition including this condition being imposed on the subsequent purchaser and without limiting the rights under copyright reserved above, no part of this publication may be reproduced, stored in or introduced into a retrieval system, or transmitted in any form or by any means (electronic, mechanical, photocopying, recording or otherwise), without prior permission of the copyright owner.

Published by
Rajath Publishers
28/450-A, Club Road, Girinagar South
Kadavanthra, Kochi-682020
www.rajathpublishers.com

Phone:0484-2313911
e-mail:rajathpbs@gmail.com

Price: ₹ 150.00

www.edutalks.org

Preface

This is an introductory level text book in electronics engineering. It is prepared as per the new syllabus for Introduction to Electronics Engineering (Course No: BE 101 - 04, 2016) for first year B Tech in Kerala Technological University. This book is intended for the students in Electronics and communication engineering, Electronics and instrumentation engineering and Biomedical electronics engineering branches. We used text books and reference books suggested in the syllabus for the preparation of this book. We also used internationally famous books and online pedagogical information of internationally famous authors and institutions. This is a humble effort for helping the students and faculty members by bringing all topics in the prescribed syllabus in one book.

Many experienced faculty members have supported us with useful suggestions. With the deepest sense of gratitude we realize the invaluable helps and encouragements rendered by many individuals during the preparation of this book.

We seek for suggestions from the readers for improving the book in future editions.

We appreciate the support given by our family members during this work.

Authors

www.edutalks.org

Syllabus and Course Plan

Course No.	Course name	L-T-P credits	Year of intro.
BE 101 - 04	Introduction to Electronics Engineering	2 - 1 - 0- 3	2016

Course objectives

1. To get basic idea about types, specification and common values of passive components
2. To familiarize the working and characteristics of diodes, transistors and MOSFETs
3. To understand working of diodes in circuits and in rectifiers
4. To familiarize some measuring instruments

Syllabus

Evolution and impact of electronics, familiarization of resistors, capacitors inductors, transformers and electromechanical components, semiconductors PN- junction diode, zener diode, LED, photodiode, bipolar junction transistors: Structure, principle of operation, different configurations, load line and operating point, biasing and stabilization, Transistor as amplifier, switch, Junction field effect transistors :structure, principle of operation, characteristics, MOSFET : structure, principle of operation, characteristics, principle of operation of photo transistor, UJT, SCR
Diode circuits and power supplies: series and parallel diode circuits
Half wave and full wave rectifiers, capacitor filter, zener voltage regulator, electronics measurements and measuring instruments : Performance parameters, analog and digital multimeter, CRO, DSO, function generator, Testing of electronics components

Expected outcome

Student can identify the active and passive electronics components and can design and set up simple circuits using diodes and transistors. Voltage and currents can be measured and monitored using measuring instruments

Reference books

1. Bell, D. A., Electronics Devices and Circuits, Oxford university press
2. Boylested, R. L. and Nashelsky, L., Electronics Devices and Circuit Theory, Pearson education
3. Karl, S., Basic Electronics: Devices, Circuits and its fundamentals PHI Learning
4. Millman, J., Halkias, C and Parikhu, C D., Integrated electronics Tata McGraw Hill
5. Sedra, A S and Smith, K C., Microelectronic circuits, Oxford Unity. press

www.edutalks.org

Course plan			
Mod.	**Contents**	**Hours**	**Sem. Marks**
I	Evolution of electronics, impact of electronics in society	1	15%
	Resistors, capacitors : types, specifications, standard values, marking, colour coding	3	
	Inductors and transformers: types, specifications, principle of working	2	
	Electromechanical components : relays and contactors	1	
II	Diodes: intrinsic and extrinsic semiconductors, PN junction diode, barrier potential, V-I characteristics, effect of temperature, equivalent circuit of a diode, piece wise linear model	3	15%
	Specification parameters of diodes and numbering	1	
	Zener diode, varactor diodes, characteristics, working principle of LED, photo diode, solar cell	3	
FIRST INTERNAL EXAM			
III	Bipolar junction transistors: Structure, typical doping, principle of operation, concept of different configurations. Detailed study of input characteristics of common base and common emitter configuration, current gain, comparison of three configurations.	3	15%
	Concept of load line and operating point. Need for biasing and stabilization, voltage divider biasing transistor as amplifier, switch, RC-coupled amplifier and frequency response.	3	
	Specification parameters of transistors and type numbering	1	
IV	Junction field effect transistors: Structure, principle of operation, characteristics, comparison with BJT	2	15%
	MOSFET: Structure, principle of operation of enhancement type MOSFET, current-voltage characteristics, Depletion type MOSFET.	2	
	Principle of operation of photo transistor, UJT, SCR.	3	
SECOND INTERNAL EXAM			

www.edutalks.org

V	Diode circuits and power supplies: Series and parallel diode circuits, clippers, clampers, voltage multipliers.	3	
	Half wave and full wave (including bridge) rectifiers, derivation of V_{rms}, V_{dc}, ripple factor, peak inverse voltage, rectification efficiency in each case, capacitor capacitor filter, working and design of a simple zener voltage regulator. Block diagram description of a dc power supply, principle of SMPS	4	20%
VI	Electronic measurements and measuring instruments	2	
	Generalized performance of parameters of instruments: error, accuracy, sensitivity, precision and resolution. Principle and block diagram of analog and digital multimeter, block diagram of CRO, measurements using CRO, Lissajous patters, principle and block diagram of DSO, function generator	4	20%
	Testing of electronics components	1	
END SEMESTER EXAM			

www.edutalks.org

Contents

1 Introduction to Electronics **13**
1.1 Evolution of electronics 13
1.2 Impact of electronics in modern world 15
1.2.1 Electronics in industry 16
1.2.2 Electronics in communication and entertainment 16
1.2.3 Electronics in medical field 17
1.2.4 Electronics in instrumentation 18
1.2.5 Electronics in defense 18
1.3 Emerging electronics 18

2 Electronic Passive Components **21**
2.1 Introduction 21
2.2 Resistors 21
2.2.1 Colour coding 22
2.2.2 Power rating 23
2.2.3 Tolerance 24
2.2.4 Fixed resistors 24
2.2.5 Variable resistors 27
2.3 Capacitors 30
2.3.1 Fixed capacitors 30
2.3.2 Variable capacitors 33
2.3.3 Breakdown voltage of a capacitor 35
2.3.4 Numbering of capacitors 35
2.4 Inductors 36
2.5 Transformers 38
2.6 Electromechanical components 40
2.6.1 Relays 40
2.6.2 Contactors 42

3 Semiconductor Physics **47**
3.1 Introduction 47
3.2 Atomic structure 47

www.edutalks.org

3.3 Energy levels 48
3.4 Energy bands 48
3.4.1 Important energy bands in solids 49
3.4.2 Valence band 50
3.4.3 Conduction band 50
3.4.4 Forbidden energy gap 50
3.5 Classification of solids based on energy band 50
3.5.1 Insulators 50
3.5.2 Conductors 51
3.5.3 Semiconductors 51
3.6 Intrinsic semiconductors 51
3.7 Concept of hole 53
3.8 Extrinsic semiconductors 53
3.8.1 n-type semiconductor 54
3.8.2 p-type semiconductor 55

4 Semiconductor Diodes 57
4.1 Introduction 57
4.2 p-n junction 57
4.3 p-n junction with no external voltage 58
4.4 Forward biased p-n junction 59
4.5 Reverse biased p-n junction 60
4.6 V-I characteristics of a p-n junction diode 61
4.6.1 Forward characteristics 61
4.6.2 Reverse characteristics 62
4.7 Reverse breakdown 63
4.8 The ideal diode 64
4.9 Static and dynamic resistances of a diode 64
4.9.1 Static resistance 65
4.9.2 Dynamic resistance 65
4.10 Diode current equation 66
4.11 Effect of temperature on diode characteristics 67
4.11.1 Effect of temperature on forward characteristics 67
4.11.2 Effect of temperature on reverse characteristics 68
4.12 Diode equivalent circuits 69
4.12.1 Piecewise-linear equivalent circuit 70
4.12.2 Transition capacitance 71
4.13 Number codes for semiconductor devices 72
4.14 Diode specification sheets 74
4.15 Special p-n junction devices 78
4.15.1 Zener diode 78
4.15.2 Varactor diode 79
4.15.3 Varactor characteristics 80

www.edutalks.org

4.15.4 Light emitting diode 81
4.15.5 Photodiodes 82
4.15.6 Solar cell 84

5 Bipolar Junction Transistors 88
5.1 Introduction 88
5.2 Construction of BJT 88
5.2.1 Doping profile of BJT 89
5.3 Operation of BJT 89
5.4 Configurations of BJT 91
5.4.1 Common base configuration 91
5.4.2 CE configuration of transistor 92
5.4.3 Relation between α and β 93
5.4.4 Common collector configuration 94
5.5 Transistor characteristics 95
5.5.1 Transistor characteristics in CB configuration 95
5.5.2 Transistor characteristics in CE configuration 98
5.6 Summary of BJT configurations 101
5.7 Transistor biasing and stabilization 105
5.7.1 Transistor biasing 105
5.7.2 DC operating point and load-line 105
5.8 Types of BJT biasing 113
5.8.1 Fixed bias 113
5.8.2 Base bias with emitter feedback 116
5.8.3 Voltage divider bias 119
5.9 Stability factor 123
5.10 Amplifiers 128
5.10.1 Characteristics of an amplifier 129
5.10.2 Classification of amplifiers 131
5.11 Transistor as an amplifier 132
5.12 RC-coupled amplifier 135
5.13 Frequency response of amplifier 137
5.14 Transistor switch 138
5.15 Transistor specification sheets 140

6 Field Effect Transistors 147
6.1 Introduction 147
6.2 Junction field effect transistor 149
6.2.1 Construction of JFET 149
6.2.2 Operation of JFET 150
6.2.3 Characteristics of JFET 152
6.2.4 Parameters of JFET 155
6.2.5 Comparison between JFET and BJT 156

www.edutalks.org

6.3 Metal oxide semiconductor FET 158
6.3.1 Enhancement-type MOSFET 158
6.3.2 Depletion-type MOSFET 164

7 Special Electronic Devices 171
7.1 Introduction 171
7.2 Phototransistor 171
7.3 Unijunction transistor 175
7.3.1 Characteristics of UJT 177
7.4 Silicon controlled rectifier 179
7.4.1 SCR operation 179
7.4.2 Two-transistor equivalent of SCR 180
7.4.3 V-I characteristics of SCR 182
7.4.4 Turning ON SCR by gate triggering 184

8 Diode Circuits 186
8.1 Introduction 186
8.2 Load-line analysis 186
8.3 Series diode configurations 190
8.4 Diode parallel circuits 192
8.5 Clipping circuits 195
8.5.1 Parallel clipping circuits 195
8.5.2 Series clipping circuits 202
8.6 Clamping circuits 208
8.6.1 Positive clamping circuits 209
8.6.2 Negative clamping circuits 211
8.7 Voltage multipliers 214

9 Rectifiers and Power Supplies 219
9.1 Introduction 219
9.2 Block diagram of a dc power supply 219
9.3 Rectifiers 220
9.3.1 Half wave rectifier 220
9.3.2 Average and rms values of half wave rectifier output 221
9.3.3 PIV of a diode in half-wave rectifier 222
9.4 Full-wave rectifier 222
9.4.1 Centre-tapped full wave rectifier 222
9.4.2 Bridge rectifier 224
9.5 Average and rms values of full wave rectifier output 226
9.6 Ripple factor 227
9.6.1 Ripple factor of a half wave rectifier 227
9.6.2 Ripple factor of a full wave rectifier 228
9.7 Efficiency of a rectifier 228

www.edutalks.org

9.7.1 Efficiency of half wave rectifier 228
9.7.2 Efficiency of full wave rectifier 229
9.8 Transformer utilization factor 230
9.9 Comparison of rectifiers 230
9.10 Filters 233
9.10.1 Capacitor filter 234
9.10.2 Pi filter 235
9.11 Voltage regulators 235
9.12 Zener diode voltage regulator 236
9.12.1 Line and load regulation of zener diode regulator 237
9.13 Switched mode power supply 241

10 Electronic Measurements and Measuring Equipments 246
10.1 Introduction 246
10.2 Performance parameters 246
10.3 Types of errors in measurement 247
10.4 Electronic instrument 248
10.5 Multimeter 248
10.5.1 Analog multimeter 249
10.5.2 Digital multimeter 254
10.6 Cathode ray oscilloscope 256
10.6.1 Cathode ray tube 257
10.6.2 Waveform display on CRO screen 261
10.6.3 Lissajous figures 264
10.7 Digital storage oscilloscope 268
10.8 Function generator 271
10.9 Digital function generator 275
10.10 Testing of electronic components 275

A Appendix 283
A.1 Loading effect 283
A.2 Using buffer to overcome loading effect 284

www.edutalks.org

Chapter 1

Introduction to Electronics

Electronics is a branch of science that deals with flow of electrons and their effects in materials such as vacuum, gas and semiconductors. Electronics engineering is concerned with the design, fabrication, and operation of electronic circuits, devices and systems. It is an offshoot of electrical engineering. The main difference of electronics from electrical engineering is that electronics deals with low range of voltage, current and power such as micro or milli-range. But it possesses the capability of controlling higher range of voltage, current and power in the order of kilo and mega units.

1.1 Evolution of electronics

Electronics finds applications in each and every field of day-to-day life such as communications, entertainment, instrumentation, medical science, defense, education, industry, etc. Advancements in electronics help humans to have more comfartable life. The evolution of electronics is mainly through three key components; *the vacuum tube, the transistor and the integrated circuit*.

In 1883, Thomas Alva Edison, discovered that electrons will flow from one metal conductor to another through vacuum. This phenomenon is known as the Edison effect. In 1904, John Fleming applied the Edison effect in inventing a two-element electron tube called *vacuum diode*. Following this, Lee De Forest developed a three-element tube, called *vacuum triode* in 1906.

This invention of vacuum triode by Lee de Forest in 1906 was the real beginning of electronics. These vacuum tubes helped to process electrical signals. They were used in radio communications, telegraph, telephone, etc. Vacuum tubes were made mainly for communication technology before World War II. Radio was the primary form of education and entertainment which was invented by Marconi. In 1927, Bell Laboratories demonstrated the first television.

www.edutalks.org

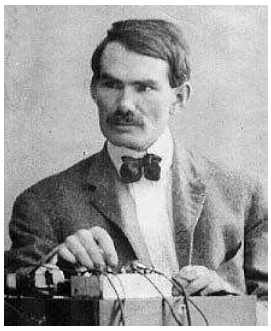

(a) Lee de Forest

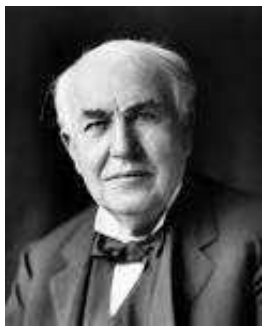

(b) Thomas Alva Edison

Figure 1.1

In 1947, the *transistor* was invented by a team of Nobel laureates, John Bardeen, Walter Brattain and William Shockley of Bell Laboratories. Invention of transistor was a significant landmark of modern electronics. This invention revolutionized electronic industry due to its features such as light weight, less power, reliability, low cost, etc. Invention of transistor reduced the size of electronic devices. Demonstration of first colour television happened in 1950 and unipolar field-effect transistor was invented by Shockley in 1952.

Figure 1.2: John Bardeen, Walter Brattain and William Shockley in Bell Laboratories

Another breakthrough happened in 1956 when Bell Laboratories developed

www.edutalks.org

the thyristor, also known as Silicon Controlled Rectifier (SCR). This generated new era of power electronics when General Electric Company commercialized it.

In 1958, Jack kilby of Texas Instruments introduced the idea of *Integrated Circuit* in which large number of electronic components could be fabricated together on a single chip. This marked the beginning of new phase of microelectronics revolution.

Figure 1.3: Jack Kilby

As the technology advanced, the number of components fabricated on a chip also increased. This advancement in chip fabrication is accordingly called Small Scale Integration (SSI)*, Medium Scale Integration (MSI), Large Scale Integration (LSI), Very Large Scale Integration (VLSI) and Ultra Large Scale Integration (ULSI). This resulted in very small, low power, more efficient electronic devices such as computers, mobile phones, etc. Generations of microelectronics industry is depicted in Figure 1.5.

Following the developments in the integrated circuits, microprocessor became a reality. Four-bit microprocessor was developed by Intel in1971, eight-bit microprocessor in 1972 and giga-bit memory chip in 1995.

1.2 Impact of electronics in modern world

In this twenty first century, we rely on electronics in the most of the aspects of day-to-day life. Electronics technology is employed in the fields of industry, communication, military, entertainments, education, automobiles, etc. In fact, it is difficult to find an area where electronic technology is not applied.

*SSI : Less than 100 transistors per chip. MSI : 100 to 1000 transistors, LSI : 1000 to 10000 transistors, VLSI : 10000 to 1 million transistors and ULSI : more than 1 million transistors per Chip.

www.edutalks.org

Chapter 2

Electronic Passive Components

2.1 Introduction

Electronic circuits are set up using various electronic components. These components are categorized into passive and active components. A complex circuit such as an integrated circuit may contain thousands of these components which are classified as shown in Figure 2.1.

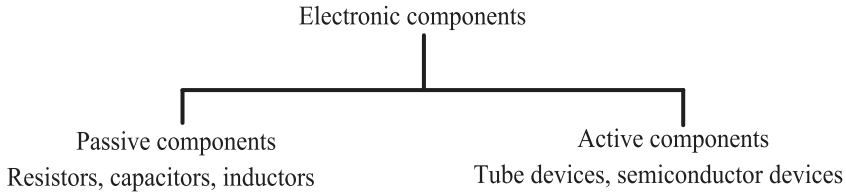

Figure 2.1: Classification of components

In this chapter we will discuss about passive components which include resistors, capacitors and inductors. *Passive components are those electronic components which are not capable of processing or amplifying an electrical signal.*

2.2 Resistors

Resistors are electronic components that are used to oppose the flow of current. Resistance is the property of a material which opposes the flow of current through it. Resistor offers a specific value of resistance to control current in

www.edutalks.org

a circuit or to develop a voltage across it. Unit of resistance is ohm (Ω). Its symbol is shown in Figure 2.2.

Figure 2.2: Symbol for resistor

Resistors are characterized by its resistance value, power handling capacity, stability, tolerance, maximum operating temperature, temperature coefficient, voltage rating, etc.

2.2.1 Colour coding

Colour coding is used to indicate the values or ratings of electronic components. The resistance value is printed on resistor using the colour bands. Colour bands are used because they are easily printed on tiny components.

Colour	I band (I value)	II band (II value)	III band (Multiplier)	IV band (Tolerance)
Black	0	0	1	—
Brown	1	1	10	—
Red	2	2	10^2	—
Orange	3	3	10^3	—
Yellow	4	4	10^4	—
Green	5	5	10^5	—
Blue	6	6	10^6	—
Violet	7	7	10^7	—
Gray	8	8	10^8	—
White	9	9	10^9	—
Gold	—	—	0.1	$\pm 5\%$
Silver	—	—	0.01	$\pm 10\%$
No colour	—	—	—	$\pm 20\%$

Table 2.1: Colour code for resistors

The color code essentially consists of four bands of different colors. The first band is the most significant figure, the second band is the second significant figure, the third band is the multiplier or the number of zeros that have to be added after the first two significant figures and the fourth band is the tolerance on the resistance value.

www.edutalks.org

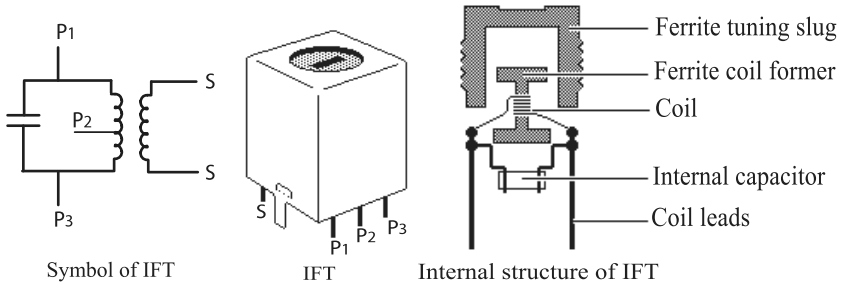

Figure 2.29: IFT, symbol and internal structure

Audio frequency transformer

As the name implies, these transformers are used in AF applications for voltage, current and impedance transformation. Input and output transformers are the popular name for the AF transformers in market. Input transformers are used to couple a low impedance source such as microphone, transmission line and transducers with a high impedance circuit like amplifiers. Output transformers are used in Public Addressing (PA) system, radio receivers etc., to match the high output impedance of an amplifier with loud speaker having low impedance.

2.6 Electromechanical components

Electromechanical components use electromagnetic force to produce mechanical effects. They are very widely used in electronic applications for controlling purposes. Electromechanical components include relays and contactors.

2.6.1 Relays

A relay is an electrical switch used to provide an electrical connection between two or more points in a circuit in response to the application of a control signal. Relays allow a low power signal to control a large amount of power. Relays mainly include Electromechanical Relays and Solid State Relays (SSRs). In this section we deal with electromechanical relays.

Electromechanical relays work by energizing a small electromagnet which causes the contacts of a switch to close as shown in Figure 2.30.

www.edutalks.org

Chapter 3

Semiconductor Physics

3.1 Introduction

Semiconductor materials are used to manufacture a range of devices that are used in modern electronic circuits. In this chapter basic concepts of semiconductors are discussed.

3.2 Atomic structure

We know that the most fundamental unit of a solid is atom. According to Bohr's atomic model, an atom consists of a positively charged nucleus around which negatively charged electrons revolve in fixed circular as well as elliptical orbits. An electron has a charge of 1.6×10^{-19} Coulombs. The nucleus contains neutrons and protons. Neutron is electrically neutral but proton is a positively charged particle. In a normal atom, the number of protons is equal to the number of electrons. Thus the entire atom is electrically neutral.

The electrons are arranged in different orbits or shells. The first shell is closest to the nucleus and contains a maximum of two electrons. The second shell can accommodate a maximum of eight electrons, the third a maximum of eighteen, and so on. In general, a shell can contain a maximum of $2n^2$ electrons where n is the number of shells. But, the outermost orbit of an atom cannot accommodate more than eight electrons. The electrons present in the outermost orbit are called valence electrons.

Depending on the number of valence electrons, elements are classified into different groups. Semiconductors are group-four elements. i.e., they have four electrons in their outermost shell. The elements Silicon and Germanium are extensively used semiconductors.

www.edutalks.org

3.7 Concept of hole

When a covalent bond is broken due to thermal energy, the removal of one electron leaves a vacancy in the covalent bond. This vacancy is called a hole. For one electron set free, one hole is created, i.e., they are generated in pairs. Since hole represents vacancy of electron, it possesses positive charge. Therefore, the concentration of free electrons and holes will be equal in an intrinsic semiconductor. This type of generation of free electron-hole pairs is referred to as thermal generation.

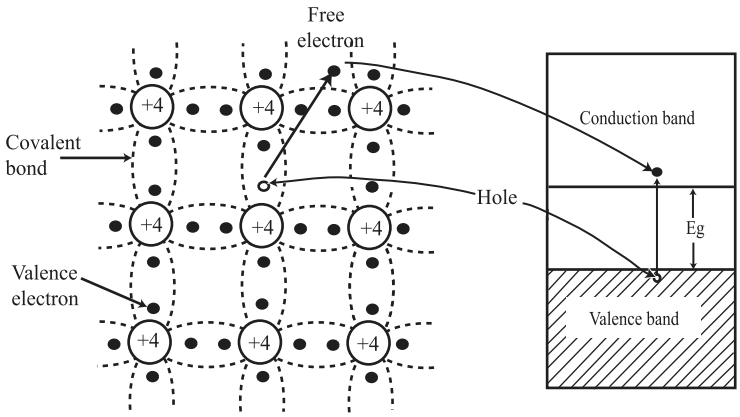

Figure 3.6: Generation of electron-hole pair in an intrinsic semiconductor

Moving through the crystal, the free electron will jump after some time into another broken bond somewhere in the crystal, canceling the hole existing there at that precise moment. This process is called electron-hole recombination.

3.8 Extrinsic semiconductors

Intrinsic semiconductor has little current conduction capability at room temperature. The characteristics of a semiconductor can be altered by the addition of certain impurities into it. These impurities can alter the band structure so as to change the electrical properties of the material. The process of adding impurities to a semiconductor is known as *doping*. A doped semiconductor is called an extrinsic semiconductor.

The process of doping increases either the number of free electrons or holes in a semiconductor. Generally, two types of impurities are available - (i) impurity atoms having five valence electrons (known as pentavalent impurity atom) and (ii) impurity atoms having three valence electrons (known as trivalent impu-

www.edutalks.org

Chapter 4

Semiconductor Diodes

4.1 Introduction

In the previous chapter, both p-type and n-type extrinsic semiconductors were discussed. These materials are used for the construction of p-n junction.

4.2 p-n junction

If we join a piece of a p-type semiconductor to a piece of n-type semiconductor (as shown in the Figure 4.1(a)), a p-n junction is formed. It is the basic building block of many semiconductor devices and is called a semiconductor diode, p-n junction diode or crystal diode.

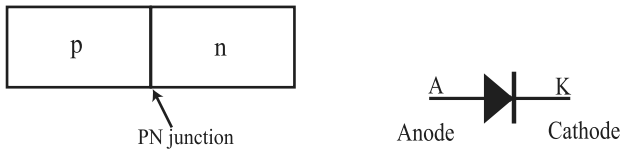

(a) p-n junction (b) Symbol for diode

Figure 4.1: p-n junction and its symbol

The symbol of diode is shown in Figure 4.1(b). The terminal connected to p-layer is called anode (A) and the terminal connected to n-layer is called cathode (K).

The most important characteristic of a p-n junction is its ability *to conduct current in one direction only*. In the other direction it offers very high resistance. The formation and operation of a diode are explained below.

www.edutalks.org

4.3 p-n junction with no external voltage

A p-n junction when just formed is shown in Fig.4.2. The p-region has holes and negatively charged impurity ions (acceptor ions). The n-region has free electrons and positively charged impurity ions (donor ions). Holes and electrons are the mobile charge carriers while the ions are immobile. There are also minority carriers present which are thermally produced. When temperature increases, more covalent bonds are broken and hence electron-hole pairs are created which constitute minority carriers.

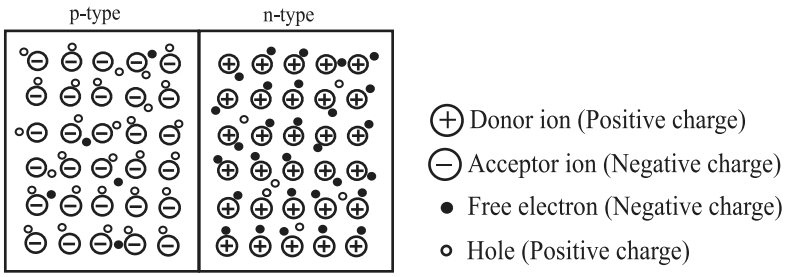

Figure 4.2: A p-n junction just formed

As soon as the p-n junction is formed, the following processes happen.

- Holes from the p-side diffuse into n-side where they combine with free electrons.
- Free electrons from n-side diffuse into p-side where they combine with holes.
- The combining of electrons and holes depletes the holes in the p-region and the electrons in the n-region near the junction. (Each recombination eliminates a hole and a free electron). This region in a p-n junction which contains *only immobile ions* and devoid of free carriers is called *depletion region*.

Barrier potential

When a p-material is combined with n-material to form a p-n junction, holes from p-side diffuse into n-side and electrons from n-side to p-side. They recombine with each other at the junction and depletion region is formed across the junction. Since the depletion region contains immobile ions which are electrically charged, it is also called the space charge region (Figure 4.3).

www.edutalks.org

$I_{\circ 1}$ = saturation current at temperature T_1
$I_{\circ 2}$ = saturation current at temperature T_2

Example 4.11.1 Calculate the rise in temperature if the reverse saturation current in a p-n junction diode increase by a factor of 50.

Solution

The reverse saturation current I_O doubles for every $10°$C rise in temperature. If $I_{\circ 1}$ is the value of $I_\circ$ at temperature T_1 and $I_{\circ 2}$ that at temperature T_2, then

$$I_{\circ 2} = I_{\circ 1} \times 2^{(T_2 - T_1)/10}$$

Applying logarithm on both sides, we get,

$$\frac{T_2 - T_1}{10} \log 2 = \log \frac{I_{\circ 2}}{I_{\circ 1}} = \log 50$$

$$\therefore \quad T_2 - T_1 = \frac{10}{\log 2} \times \log 50 = 56.4°\text{C}$$

4.12 Diode equivalent circuits

When multiple number of devices are used in a circuit, circuits become very complex. Its analysis becomes time consuming and laborious. To simplify the analysis and design of such circuits, equivalent circuits are used for devices. Equivalent circuit is a circuit consisting the components, to represent the characteristics of a device. It is obtained by approximating the device characteristics by straight-line segments.

To analyze the diode circuits, various models are used. Two models namely constant drop model and piecewise linear model are discussed in this section.

Equivalent circuit for ideal diode

Simplest approximation of a diode is obtained when the diode is considered ideal. Characteristics of an ideal diode is shown in Figure 4.13. For an applied forward voltage greater than 0 V, current flows through the diode and for negative negative voltage current does not flow.

www.edutalks.org

4.15 Special p-n junction devices

Based on the principle of working of p-n junction diode, many special purpose devices are developed. Zener diode, varactor diode, Light Emitting Diode (LED), photo diode, and solar cell are major special purpose p-n junction devices.

4.15.1 Zener diode

Zener diodes are special type of diodes which are designed to operate in the breakdown region. Zener diode is *heavily doped* and hence depletion region is very *thin*. When the reverse voltage across it is increased, the *electric field* across the junction becomes *very high*. This field exerts a force on the electrons in the outermost shell. This force is so high such that electrons are pulled away from the parent nuclei and become free carriers. When this field is about 3×10^7 V/m, electrons are pulled away from the covalent bonds. Thus a large number of electron-hole pairs are produced and reverse current increases sharply. This effect is known as *zener breakdown*.

The circuit symbol for zener diode is shown in Figure 4.19.

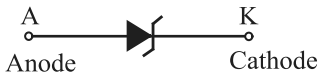

Figure 4.19: Symbol for zener diode

If the applied voltage exceeds the breakdown voltage, a zener diode acts as a constant voltage source. The most common application of zener diode is in the *voltage regulator* circuit. Other applications include peak clippers or limiters in waveshaping circuits and as a fixed reference voltage in transistor biasing circuits.

V-I characteristics of a zener diode

Zener diode is operated in the *reverse bias* region. As the reverse voltage is increased, the reverse current remains negligibly small upto a certain point called knee of the curve. At this point, the zener breakdown begins. The breakdown voltage remains constant and current increases sharply. There is a minimum value of zener current called breakover current which must be maintained in order to keep the diode in breakdown region. Also, there is a maximum value of zener current above which the diode may get damaged.

www.edutalks.org

Chapter 5

Bipolar Junction Transistors

5.1 Introduction

Transistor is the main building block element of modern electronic devices. It was invented by John Bardeen, Walter Brattain and William Shockley in 1948 at Bell Laboratories in United States. All three physicists were awarded Nobel prize for the invention in 1956. Transistor replaced bulky electronic devices by small and compact devices. They possess advantages such as smaller size and light weight, low operating voltage, greater efficiency, long life, etc.

Transistors are available in two major categories; Bipolar Junction Transistor (BJT) and Field Effect Transistor (FET). In BJT, current conduction is due to the flow of both electrons and holes whereas in FET, current conduction is due to only one type of carriers; either electrons or holes.

5.2 Construction of BJT

The BJT is a three terminal semiconductor device. There are two types of BJT; npn and pnp. The constructional details of BJT and and their symbols are shown in Figure 5.1. The BJT is fabricated with three separately doped regions. The npn device has one p-region between two n-regions and the pnp device has one n-region between two p-regions.

BJT consists of three semiconductor regions: the emitter region, the base region and the collector region and thus two junctions, the *emitter-base junction* (EBJ) and the *collector-base junction* (CBJ). One terminal each is connected with these regions for electrical contacts, called emitter, base and collector.

Charge carriers of both polarities, i.e., electrons and holes participate in the current conduction process in a BJT, hence the name bipolar. The direction of arrow in the symbol represents the direction of emitter current.

www.edutalks.org

Common emitter configuration is widely employed as amplifier due to its high voltage gain. Many single stage common emitter amplifiers can be connected to form a multistage amplifier.

Early effect or base-width modulation

When the reverse bias voltage applied across the collector-base junction increases, the depletion region penetrates deeper into collector and base. The number of charge carriers move away from the junction are equal at both sides. Since the doping in the base is much smaller than that in the collector, the penetration of the depletion region into the base is much larger than into the collector. The effective base-width thus decreases. This modulation of effective base-width by collector voltage is called *base-width modulation* or *Early effect*.

5.6 Summary of BJT configurations

The major parameters of three configurations are summarized in the Table 5.2.

Characteristic	CB	CE	CC
Input resistance	Low	Medium	High
Output resistance	Very high	High	Low
Voltage gain	High	Medium	Low
Current gain	Low	Medium	High

Table 5.2: Summary of BJT configurations

Example 5.6.1 When the collector to emitter voltage of a transistor in CE configuration is increased from 3 to 14 V, collector current changes from 4 to 6 mA. Determine the output resistance of the transistor.

Solution

We know, output resistance,

$$r_o = \frac{\Delta V_{CE}}{\Delta I_C}$$

$$\Delta V_{CE} = 14 - 3 = 11 \text{ V} \quad \text{and} \quad \Delta I_C = 6 - 4 = 2 \text{ mA}$$

Therefore,

$$r_o = \frac{11 \text{ V}}{2 \text{ mA}} = 5.5 \text{ k}$$

www.edutalks.org

5.7 Transistor biasing and stabilization

Major applications of transistors are amplification and switching. Amplification is the process of increasing the magnitude of the signal without any change in signal shape. For acting as an amplifier, transistor should be operated in active region. It should not deviate from this region for proper amplification. This is achieved by properly biasing transistor and stabilizing it.

5.7.1 Transistor biasing

In order for a transistor to amplify a signal, it has to be properly biased. Biasing a transistor means applying dc voltages for keeping the transistor in the desired region of operation. Biasing deals with setting a fixed level of dc voltages and currents for transistor. These values of dc voltages and currents are expressed by the term operating point or quiescent point.

For linear amplification*, the transistor should operate in active region. This means forward biasing the base-emitter junction and reverse biasing collector-base junction. As a result, transistor amplifies input signal without any distortion in shape as that of the input.

5.7.2 DC operating point and load-line

The purpose of biasing a transistor is setting particular values of voltages and currents for proper operation of transistor. These values of voltage and current define the point at which transistor operates and this point is known as *Quiescent point* or *Q-point*.

Usually dc values of base current (I_B), collector current (I_C), collector-emitter voltage (V_{CE}) and base-emitter voltage (V_{BE}) define the Q-point. Thus setting Q-point means selection of proper values of these currents and voltages. The choice of operating point is important since it determines the range of operation of transistor in the desired application. *The operating point should be located in the active region* considering various ratings of transistor such as maximum collector current ($I_{C\,\max}$) and maximum collector-emitter voltage ($V_{CE\,\max}$). After dc biasing conditions are established in the circuit, ac input is applied to the transistor.

Consider a transistor circuit shown in Figure 5.14. The dc source V_{BB}, forward biases the emitter junction through a current limit resistor R_B and another dc source V_{CC} reverse biases the collector junction through resistor R_C (load resistance).

Applying Kirchoff's Voltage Law at base circuit, we get,

*Linear amplification is pertaining to distortion-less amplification, (see section 5.11 in page 133)

www.edutalks.org

5.10 Amplifiers

Amplification is the process of increasing the strength of a signal. Amplifier increases the magnitude of current or voltage input by means of energy drawn from an external source. It should contain at least one active device such as transistor. The active device converts the energy from the dc source into energy at the output of amplifier, which is proportional to the input signal.

A widely used symbol for an amplifier is shown in Figure 5.36. Here V_i is the input voltage, V_o is the output voltage and A_v represents voltage gain which is the ratio of the output voltage to input voltage.

The amplifiers take power from an external energy source and use it to boost the input signal. Thus it delivers an output signal whose waveform corresponds to the input signal but its power level is higher.

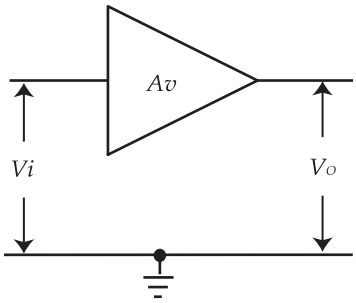

Figure 5.36: Symbol for amplifier

The additional power content in the output signal is supplied by the dc power source used to bias the active device. A block schematic for an amplifier is given in Figure 5.37.

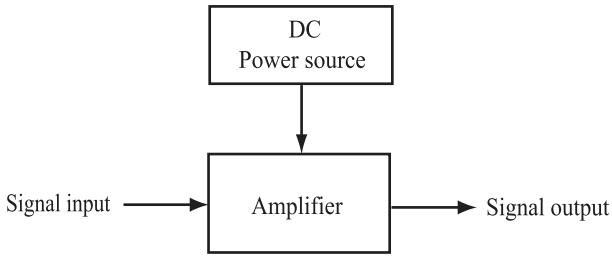

Figure 5.37: A schematic for amplifier

The output waveform of an amplifier must be an exact replica of the input waveform. It preserves the details of the signal waveform and any deviation

www.edutalks.org

current decreases which results in decrease of collector current. By the expression (5.11), collector-emitter voltage increases. In this way, *common emitter amplifier introduces 180° phase shift. Output voltage will be an inverted version of the input with amplification*.

5.12 RC-coupled amplifier

Common Emitter (CE) amplifier is widely used in audio frequency applications and in radio and TV receivers. It provides current, voltage and power gains. For the proper functioning of an amplifier, the transistor must be biased in the active region where the base current has complete control over the collector current. Thus a small increase in the base current results in a relatively large increase in the collector current and a small decrease in the base current is followed by a large decrease in the collector current.

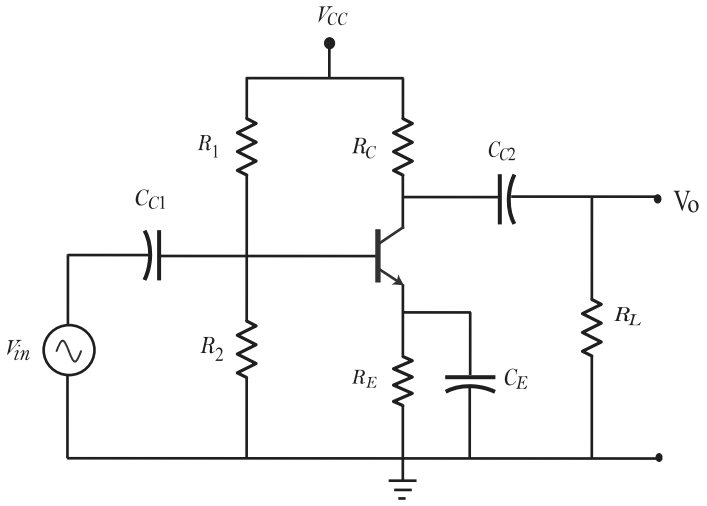

Figure 5.44: RC-coupled amplifier

When large voltage gain is required, many stages of amplifiers are used. The coupling between successive stages are done using different methods namely; resistance-coupling, transformer coupling and direct coupling. Circuit shown in Figure 5.44 is RC-coupled common emitter amplifier. The coupling stage in RC-coupled amplifier forms an RC network. Voltage divider bias technique is employed in this circuit.

www.edutalks.org

Chapter 6

Field Effect Transistors

6.1 Introduction

Field-Effect Transistors (FETs) are another classification of transistors that are widely used in both analog and digital circuits. They possess very high input resistance and characterized by small physical size and low power consumption. FET is basically of two types; Junction FET (JFET) and Insulated Gate FET (IGFET). IGFETs are also known as Metal Oxide Semiconductor FETs (MOSFETs) which are characterized by the presence of insulator, compared to junction gate FET.

Types of FETs

In FETs, a voltage applied at the control input (Gate) produces an electric field that affects the current flow between the other two terminals (Source and Drain). For this reason FET is called a voltage controlled device. FET is a unipolar device because its operation depends only on one type of charge carriers (holes or electrons).

Advantages of FETs

Field effect transistors possess many advantages. Some of them are listed below.

1. Very high input impedance (approximately 10^9 to 10^{12} Ω).
2. Very small in size, occupies very small space in ICs.
3. Source and drain terminals are interchangeable.
4. Low-power consumption.
5. Less noisy.
6. No minority carrier charge and hence the device never undergoes saturation (Turn OFF is faster).

www.edutalks.org

Amplification factor μ
It is defined as the ratio of change in drain to source voltage to the change in gate to source voltage, keeping drain current remains constant.

$$\text{Amplification factor, } \mu = \left.\frac{\Delta V_{DS}}{\Delta V_{GS}}\right|_{I_D \text{ constant}}$$

μ, g_m and r_d are related each other by the following relationship

$$\mu = g_m \times r_d$$

6.2.5 Comparison between JFET and BJT

No.	JFET	BJT
1.	Unipolar device. Conduction occurs due to the flow of either electrons or holes.	Bipolar device. Conduction occurs due to the flow of both electrons and holes.
2.	Voltage controlled device. Gate voltage controls the drain current through the channel.	Current controlled device. Base current controls the collector current.
3.	Input resistance is very high (MΩ).	Input resistance is very low compared to JFET (kΩ).
4.	Negative temperature coefficient. High current level does not lead to thermal breakdown.	Positive temperature coefficient. High current level leads to thermal breakdown.
5.	Does not suffer from minority carrier storage effects and thus having higher switching speed.	Suffers from minority carrier storage effects and thus having lower switching speed.
6.	Generate less noise.	Generate more noise.
7.	Occupies less space on IC.	Occupies more space on IC.
8.	Power consumption is low.	Power consumption is high.

Table 6.1: Comparison between JFET and BJT.

Example 6.2.1 When the reverse gate voltage of JFET changes from 5.4 V to 5.2 V, the drain current changes from 3.1 mA to 3.5 mA. Find out the value of transconductance of the transistor.

www.edutalks.org

6.3 Metal oxide semiconductor FET

Metal Oxide Semiconductor (MOS) transistor is another type of FET which is the basic building block element of modern electronic devices such as Integrated Circuits (ICs), semiconductor memories, microprocessors, etc. It is characterized by the presence of insulator such as oxide. For this reason MOSFET is also called Insulated Gate FET (IGFET). There is no direct electrical contact between the gate terminal and the channel of a MOSFET. Due to the presence of insulator, MOSFET possesses very high input impedance and there is no gate current.

Similar to JFET, MOSFET is a unipolar device in which the current in a conducting channel between the source and the drain is controlled by a voltage applied to the gate. In addition to the drain, gate and source, there is a fourth terminal; substrate, or body. Generally, for practical applications, the substrate is connected to the source terminal.

There are two types of MOSFETs depending on whether the channel is already existing or not; Depletion type-MOSFET and Enhancement type-MOSFET.

Devices that are normally cut-off with zero gate bias are classified as 'enhancement-mode' devices. In such devices a channel has to be created with the application of gate bias with appropriate polarity before conduction begins. Devices that conduct with zero gate bias are called 'depletion-mode' devices. Enhancement-mode devices are more widely used. The built-in channel in depletion type MOSFETs can be depleted by the application of gate bias of appropriate polarity. Depending on the type of charge carriers, enhancement and depletion MOSFETs are further classified as n-channel and p-channel (Table 6.2).

Channel \ Type	Enhancement	Depletion
n	Enhancement-type NMOS	Depletion-type NMOS
p	Enhancement-type PMOS	Depletion-type PMOS

Table 6.2: Classification of MOSFET

6.3.1 Enhancement-type MOSFET

Enhancement-type MOSFET is normally OFF during zero gate bias. It is driven into conduction by applying sufficient gate voltage by which a channel is created between source and drain. Enhancement-type MOSFET is of two types; n-channel and p-channel. The n-channel enhancement-type MOSFET becomes

www.edutalks.org

Chapter 7

Special Electronic Devices

7.1 Introduction

Large number of electronic devices are being used in various applications. Three special purpose electronic devices are introduced in this chapter, namely, *phototransistor, Unijunction Transistor (UJT) and Silicon Controlled Rectifier (SCR)*. Phototransistors find applications in optical engineering applications. SCRs are widely used in power electronics applications. Power Electronics is a branch of electronics engineering dealing with converting electrical energy from one form to another in an efficient, compact, and robust manner for convenient utilization. Power devices are capable of handling high power. UJT is widely used for switching of thyristors. Thyristors comprise a class of semiconductor components whose structure is characterized by alternating layers of p and n-material.

7.2 Phototransistor

Phototransistor is a photoelectric device which *converts light energy into electric energy*. Its construction is similar to that of BJT as illustrated in Figure 7.1 . Compared to BJT, phototransistor has larger base and collector width. The collector-base junction is photosensitive. The base current of the phototransistor is generated by the incident light at collector-base junction due to photoelectric effect. The phototransistor is constructed with a lens that focuses incident light on the collector base junction.

www.edutalks.org

Chapter 8

Diode Circuits

8.1 Introduction

Diodes are used in variety of electronic applications such as rectifiers, limiters, level shifters, switches, etc. In this chapter, we deal with characteristics and response of diode to various inputs which are used in variety of configurations.

8.2 Load-line analysis

A simplest diode circuit is shown in Figure 8.1(a). Diode is forward biased by a voltage source E and output voltage is taken across a resistor R. V-I characteristics plot of diode is also shown in Figure 8.1(b).

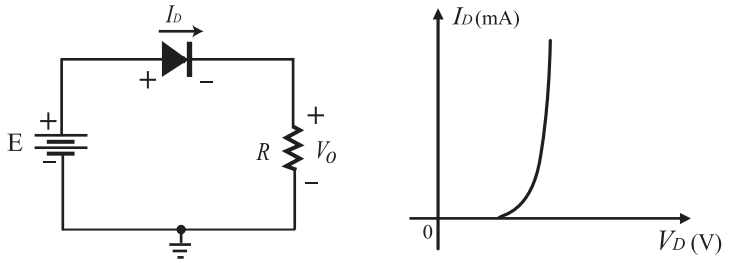

(a) Diode circuit (b) V-I characteristics of diode

Figure 8.1: Series diode configuration

Current through diode I when a voltage V is applied, is given by the diode equation as

www.edutalks.org

$$E_1 - E_2 - IR - V_D = 0$$

$$I = \frac{E_1 - E_2 - V_D}{R}$$

$$\text{Therefore, } I = \frac{10 - 5 - 0.7}{1\text{ k}} = 4.3\text{ mA}$$

8.5 Clipping circuits

Clipping circuits, also called clippers, are networks that clip away a portion of an input signal without distorting remaining part of the waveform. They are non-linear wave shaping circuits. We know that an ideal diode acts as a short circuit when forward biased and open circuit when reverse biased. This principle is used in clipping circuits.

Diode clipping circuits are of two types; shunt clipping circuits and series clipping circuits. In shunt clipping circuits, output is taken parallel (shunt) with the diode and in series clipping circuits, output is taken in series with the diode. A resistance is used in the circuit to limit the current through the diode.

8.5.1 Parallel clipping circuits

Parallel clipping circuits are classified as positive and negative clipping circuits. Positive clipping circuits clip positive going signals. Similarly negative clipping circuits clip negative going signals. Circuit diagram of a positive clipping circuit is shown in Figure 8.14. The applied input waveform and obtained output waveform are also shown in figure, considering the diode employed in the circuit is ideal (i.e., the voltage drop across it is zero while conducting).

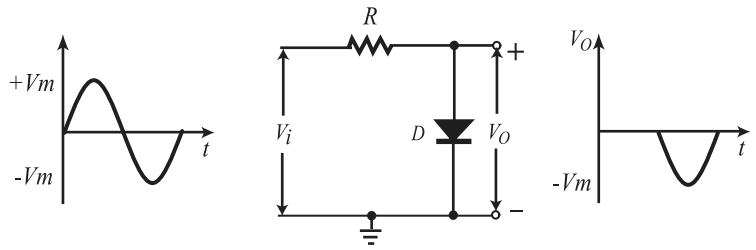

Figure 8.14: A positive clipping circuit and its input and output waveforms considering the diode is ideal.

www.edutalks.org

8.6 Clamping circuits

Clamping circuits shift the input signal up or down to a desired level. They are also known as dc insertion circuits or dc restorers. There are positive and negative clamping circuits. Figure 8.42 shows the schematic of clamping circuits. Circuit which adds positive voltage to the input signal is called positive clamping circuit and that which adds negative voltage is called negative clamping circuit.

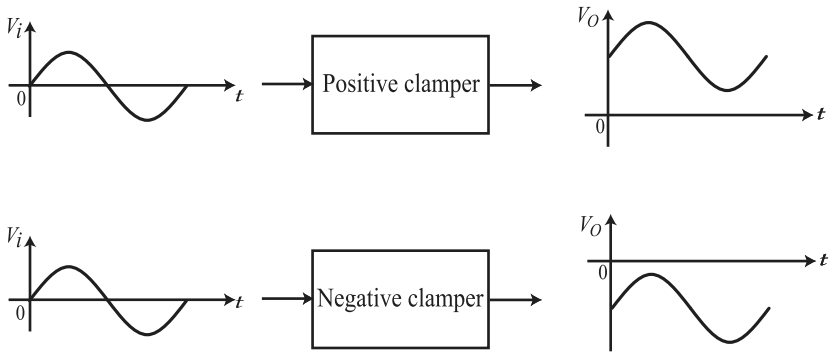

Figure 8.42: Schematic of clamping circuits

Clamping circuits can be set up by connecting the dc source with appropriate polarity. If a dc voltage source having a voltage of V_m connected with positive terminal at right side, it adds positive voltage to the input signal V_i, hence its name positive clamping circuit. Now the signal has excursion from 0 volt to $2V_m$ volts.

Similarly, if the dc source is connected with its negative terminal at right side, it adds negative voltage to the input signal creating an excursion from 0 volt to $-2V_m$ volts, hence its name negative clamper. But, using dc source is expensive. Therefore, diodes and capacitors are utilized for the purpose of clamping.

In the following discussion input signal is represented by

$$V_i = V_m \sin \omega t$$

www.edutalks.org

Chapter 9

Rectifiers and Power Supplies

9.1 Introduction

We have discussed in the previous chapter that a p-n junction diode conducts only when it is forward biased and does not conduct when reverse biased. Thus current flow takes place in one direction only. This unidirectional property of diode is used in several applications such as rectifiers, clipping circuits, clamping circuits, etc.

9.2 Block diagram of a dc power supply

We know that electric energy available is in the form of alternating voltage (230 V, 50 Hz in India). But dc supply is essential for the operation of many electronic devices. The block diagram of a dc power supply is shown in Figure 9.1.

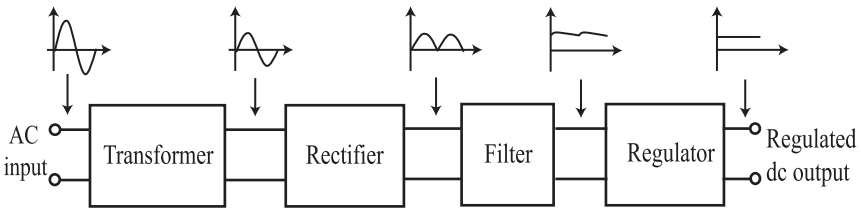

Figure 9.1: Block diagram of a dc power supply

The first block is a transformer which steps down the ac input into the desired voltage level. It also isolates the power supply from the power line. The rectifier converts ac into pulsating dc. The output of rectifier is then passed through a filter circuit. Filters are used for removing ripples (ac components) in

www.edutalks.org

the secondary voltage are as shown in Figure 9.7. Thus the diode D_1 is reverse biased and the diode D_2 is forward biased. D_2 conducts and D_1 becomes open. The current flows through D_2, load resistor R_L and lower half of the winding.

It is important to note that current through the load flows in the same direction during both the positive and negative half cycles of the input. As a result, the output voltage developed across the load resistor is of same polarity and magnitude.

PIV of a diode in full wave rectifier

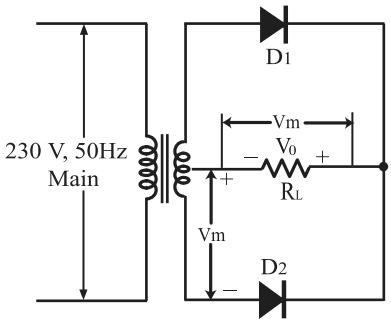

Figure 9.8: The PIV across non-conducting diode D_2 is $2V_m$

We know that PIV is the maximum voltage the diode can withstand during the reverse bias. Consider the circuit of a centre-tapped full wave rectifier as shown in Figure 9.8. At positive half cycle of the input voltage the diode D_1 is conducting while the diode D_2 is open. Let V_m represents the maximum voltage across each half of secondary winding. The whole of the voltage across the upper half winding appears across the load resistor R_L. Therefore the reverse voltage across the non conducting diode D_2 is the sum of the voltage across the lower half winding and the voltage across the load R_L. From the figure, this voltage is $V_m + V_m = 2V_m$. Hence,

PIV for a centre-tapped full wave rectifier, PIV $= 2V_m$

9.4.2 Bridge rectifier

Circuit diagram of a bridge rectifier is shown in Figure 9.9. It uses four diodes instead of two, but avoids the use of centre-tapped transformer.

www.edutalks.org

Solution

Selection of zener diode: $V_\circ = V_z = 5$ V and $I_{z\ \max} = 35$ mA

$\therefore$ Power dissipation, $P_z = V_z \times I_{z\ \max} = 5 \times 35 \times 10^{-3} = 0.2$ W

Hence a 0.5Z 5.6 zener diode is selected.

Selection of load resistance, R_L:

$$R_{L\ \min} = \frac{V_\circ}{I_{L\ \max}} = \frac{5}{40 \times 10^{-3}} = 125\ \Omega$$

$$R_{L\ \max} = \frac{V_\circ}{I_{L\ \min}} = \frac{5}{20 \times 10^{-3}} = 250\ \Omega$$

Selection of R_s:

Maximum value resistance, $R_{s\ \max}$

$$= \frac{V_{in\ \max} - V_\circ}{I_{L\ \min} + I_{z\ \max}} = \frac{20 - 5}{(20 + 35)\ \text{mA}} = 273\Omega$$

Minimum value of resistance, $R_{s\ \min}$

$$= \frac{V_{in\ min} - V_\circ}{I_{L\ \max} + I_{z\ \min}} = \frac{10 - 5}{(40 + 15)\ \text{mA}} = 77\ \Omega$$

Therefore value of R_s can be chosen as, R_s

$$= \frac{R_{\max} + R_{\min}}{2} = \frac{273 + 77}{2} = 175\ \Omega$$

9.13 Switched Mode Power Supply

The zener shunt regulator discussed in section 9.12 has a major disadvantage that the zener diode (control element) is always ON and hence large amount of power is wasted. Therefore such regulators are highly inefficient. i.e., ratio of load power to total input power is relatively small. When efficiency is a major concern, switching type regulator is often used. In this design, control element is switched ON and OFF at a rapid rate. This results in low power consumption.

Switched Mode Power Supply (SMPS) is an electronic power supply that incorporates a switching regulator to convert electrical power efficiently. Fundamental component of switching regulator is a pulse width modulator. This circuit produces a train of pulses and modulates (varies) its width according to a input signal. In other words, it varies the duty cycle of the pulse wave.

www.edutalks.org

Chapter 10

Electronic Measurements and Measuring Equipments

10.1 Introduction

Electronic measuring instruments are essential part of electronic applications. They are required for studying and analyzing behavior and operation of electronic circuits. Measurement is the process of determining the amount, degree or capacity by comparison with the accepted standards of the system units being used. Electronic instrument is a device for determining the value or magnitude of a quantity or variable such as voltage, current or resistance.

10.2 Performance parameters

Generally performance parameters of an electronic equipment are accuracy, precision, resolution, sensitivity, expected value and error.

Accuracy: It is the degree in exactness (closeness) of actual measurement compared to the expected (desired) value of measured quantity.

Precision: It is a measure of consistency or repeatability of measurement. This means when a quantity is measured repeatedly; the instrument should give the same value. i.e., successive reading do not differ.

Resolution: The smallest change in a measurement variable to which an instrument will respond.

Sensitivity: It is the ratio of change in the output (response) of the instrument

www.edutalks.org

Analog meter	Digital meter
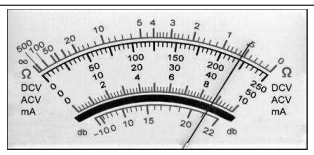	
It produces output as a reading on a scale against a pointer	Digital multimeter displays output in numerical form
There is chance for error due to wrong scale or incorrect reading	No possibility of error
Low resolution and accuracy	High resolution and accuracy
When terminal polarity is reversed, pointer attempts to deflect to the left of zero.	When terminal polarity is reversed, it indicates negative quantity
Analog multimeters have to be set for the specific range of measurement manually	Advanced digital multimeters have auto-ranging feature
It may be damaged if connected with wrong polarity or measured quantity exceeds the desired range.	Can handle rougher treatment

Table 10.1: Comparison of analog and digital meters

10.6 Cathode ray oscilloscope

The Cathode Ray Oscilloscope (CRO) is a versatile laboratory instrument used for the display and study of electrical waveforms. Thus it is useful for the measurement of voltage, current, power, frequency, phase difference, delay time, rise time, fall time etc. It allows the user to see the amplitude of electrical signals as a function of time on a screen.

The heart of the oscilloscope is Cathode Ray Tube (CRT). The essential components of a CRO are

1. Cathode Ray Tube
2. The vertical deflection system
3. The horizontal deflection system, including the time-base generator and synchronization circuitry.
4. Power supplies.

www.edutalks.org

CRO	DSO
CRO processes signal in analog format	DSO processes signal in digital format
Directly applies signal to be observed across y-plates	Digitizes the input signal with the help of ADC
No storage of waveforms	Store waveforms in memory
Signal can be processed within oscilloscope itself	Due to digital format, the signal can be processed with a PC connected to it
Limited frequency range	Large frequency range
Due to lack of memory, the signal is displayed instantaneously	The stored signal can be viewed at any time

Table 10.2: Comparison of CRO and DSO

DSO converts the input signal into digital format by a sequence of processes such as sampling with the use of an ADC. It then stores this digital information in memory and reconstructs the waveform on the screen. A comparison between CRO and DSO is given in Table 10.2.

10.8 Function generator

Various waveforms such as sine, triangular, square, etc. are required in many applications of electronics at laboratories and industries. For such purposes, signal generators are widely used. A signal generator is an electronic instrument that generates repeating voltage waveforms. The amplitude and frequencies of all these waveforms can be adjusted through a wide range.

Block diagram of function generator

Figure 10.27 shows the block diagram of function generator. A function generator consists of an integrator, squaring circuit, sine wave converter and attenuator in addition to amplitude and frequency control. Integrator generates a linearly varying ramp waveform from the applied dc supply. The integrator output is fed into squaring circuit and the sine wave converter. Integrator converts the square wave from the squaring circuit into a triangular wave. Sine wave converter converts the signal from integrator to sine wave. A switch is used for selection of sine, triangular or square waves. The attenuator is used for reducing amplitude to desired value. It provides low output impedance and control on output amplitude.

www.edutalks.org

For Copies,

Rajath Publishers

28/450-A, Club Road, Girinagar South

Kadavanthra, Kochi-682020

Phone: 0484-2313911

e-mail:rajathpbs@yahoo.com

www.rajathpblishers.com

https://www.amazon.in/dp/819218949X

www.edutalks.org